ACTUATECH
ACTUATOR TECHNOLOGY

Actuator datasheet

GS960F12F16

Modification reserved. Rev.date 05.2021.
No guarantee for accuracy.
Older data sheets are invalid

COMPANY WITH MANAGEMENT SYSTEM CERTIFIED BY DNV GL
= ISO 9001 =
= ISO 14001 =

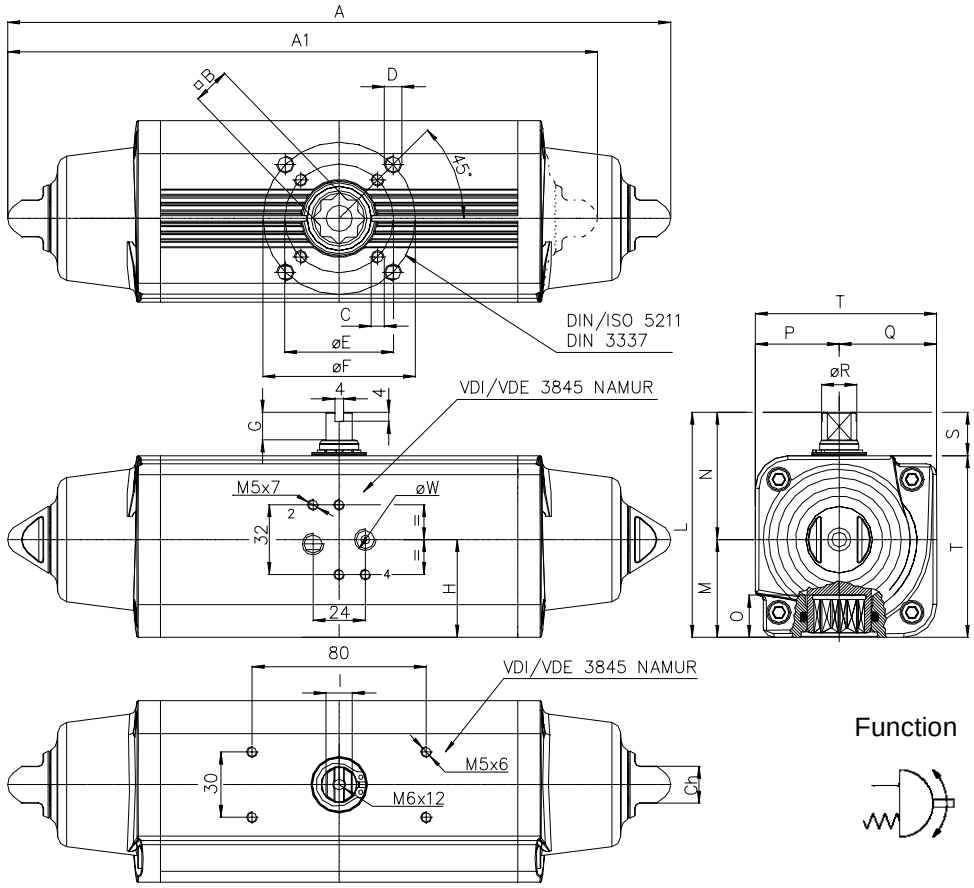

Function

Ref.	Dimensions (mm)
Flange	F12 - F16
C x depth	M12x18
D x depth	M20x30
E	125
F	165
B	46
O	48.5
A	828
G	18.5
H (bore)	99.2
I	32
L	237.7
M	114.7
N	123
P	93
Q	114.7
R	46
S	30
T	207.7
W	1/4" GAS
Ch	36
Ancillaries Attachment	AA2

Spring return Actuators Normally Closed (N.C.)- Output Torque related to rotation angle , in Nm
(0°valve closed 90° valve open)

Spring Torque				Air pressure supply in bar																												
SIZE	0°	50°	90°	2,4			2,8			3			3,5			4,2			5			5,6			6			7			8		
				0°	50°	90°	0°	50°	90°	0°	50°	90°	0°	50°	90°	0°	50°	90°	0°	50°	90°	0°	50°	90°	0°	50°	90°	0°	50°	90°	0°	50°	90°
2,8	320	240	480	366	171	206	480	240	320	537	274	377	680	360	520	880	480	720															
3,5	400	300	600							457	214	257	600	300	400	800	420	600	1029	557	829	1200	660	1000									
4,2	480	360	720										520	240	280	720	360	480	949	497	709	1120	600	880	1234	669	994	1520	840	1280	1806	1011	1566
5,6	640	480	960																789	377	469	960	480	640	1074	549	754	1360	720	1040	1646	891	1326

Technical Data

Max Pressure	** Min Pressure	Rotation	Stroke Adjustment	Screw Stroke Adjustment	*Moving time (sec.)		Operating temperature (°C)
					Opening	Closing	
8.4 bar	2.4 bar	92° -1° +91°	10 °	For 1° drive Need 2/3 turn screw	2.9	3.4	Standard –20°C +80°C High temperature –20°C +150°C Low temperature –50°C +60°C

Weight Kg	Chamber Ø (mm)	Air volume L/cycle	Maximum flange torque values
42	160	5.57	F12 = 1000 Nm F16 = 4000 Nm

Spring return Actuator with spring force 2.8 , is manufactured with only one spring cap and normal end cap (available only in standard version).	A1	Weight Kg
	714.4	36

*The moving time could vary on different operating and installation factors.
**Attention: for “High Temperature” and “Low Temperature” version, the Min Pressure is 3.5 bar.

Operating Medium
The operating medium shall have a dew point equal to– 20 °C or, to be at least, 10 °C below the ambient temperature (ISO 85731, Class 3).
The maximum particle size shall not exceed 40 µm (ISO 8573-1, Class 5).

ACTUATECH S.p.A.
Via San Lorenzo, 70 - 25069 Villa Carcina (BS) – ITALY Tel. (+39) 0308908142 Fax (+39) 0308908143
http://www.actuatech.com e-mail: actuatech@actuatech.com