ACTUATECH
ACTUATOR TECHNOLOGY

Actuator datasheet

# GS240F10F12

Modification reserved. Rev.date 05.2021.
No guarantee for accuracy.
Older data sheets are invalid

COMPANY WITH MANAGEMENT SYSTEM CERTIFIED BY DNV GL
= ISO 9001 =
= ISO 14001 =

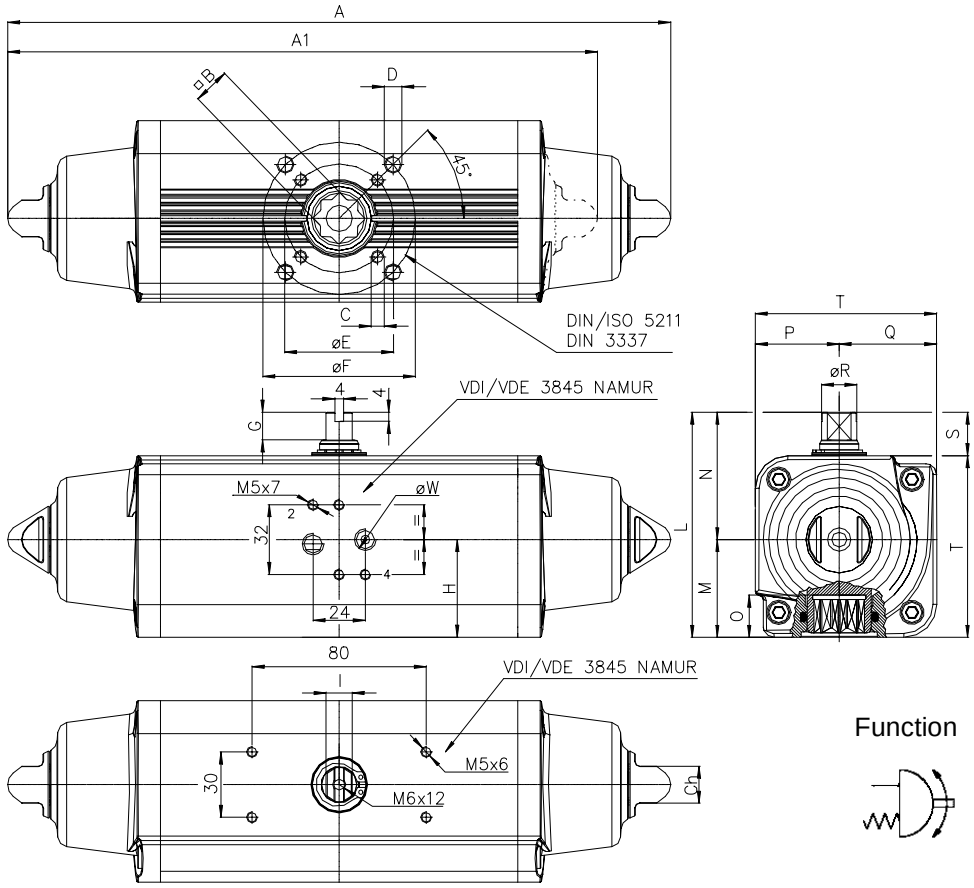


Function



| Ref. | Dimensions (mm) |
|---|---|
| Flange | F10 - F12 |
| C x depth | M10x15 |
| D x depth | M12x18 |
| E | 102 |
| F | 125 |
| B | 27 |
| O | 29.5 |
| A | 520.5 |
| G | 19 |
| H (bore) | 57.4 |
| I | 19 |
| L | 164.9 |
| M | 72.9 |
| N | 92 |
| P | 62 |
| Q | 72.9 |
| R | 29 |
| S | 30 |
| T | 134.9 |
| W | 1/4" GAS |
| Ch | 27 |
| Ancillaries Attachment | AA2 |

## Spring return Actuators Normally Closed (N.C.)- Output Torque related to rotation angle , in Nm
( 0°valve closed 90° valve open )

| Spring Torque | | | | Air pressure supply in bar | | | | | | | | | | | | | | | | | | | | | | | | | | | | |
|---|---|---|---|---|---|---|---|---|---|---|---|---|---|---|---|---|---|---|---|---|---|---|---|---|---|---|---|---|---|---|---|---|
| | | | | 2,4 | | | 2,8 | | | 3 | | | 3,5 | | | 4,2 | | | 5 | | | 5,6 | | | 6 | | | 7 | | | 8 | | |
| SIZE | 0° | 50° | 90° | 0° | 50° | 90° | 0° | 50° | 90° | 0° | 50° | 90° | 0° | 50° | 90° | 0° | 50° | 90° | 0° | 50° | 90° | 0° | 50° | 90° | 0° | 50° | 90° | 0° | 50° | 90° | 0° | 50° | 90° |
| 2,8 | 80,0 | 60,0 | 120,0 | 91,4 | 42,9 | 51,4 | 120,0 | 60,0 | 80,0 | 134,3 | 68,6 | 94,3 | 170,0 | 90,0 | 130,0 | 220,0 | 120,0 | 180,0 | | | | | | | | | | | | | | | |
| 3,5 | 100,0 | 75,0 | 150,0 | | | | | | | 114,3 | 53,6 | 64,3 | 150,0 | 75,0 | 100,0 | 200,0 | 105,0 | 150,0 | 257,1 | 139,3 | 207,1 | 300,0 | 165,0 | 250,0 | | | | | | | | | |
| 4,2 | 120,0 | 90,0 | 180,0 | | | | | | | | | | 130,0 | 60,0 | 70,0 | 180,0 | 90,0 | 120,0 | 237,1 | 124,3 | 177,1 | 280,0 | 150,0 | 220,0 | 308,6 | 167,1 | 248,6 | 380,0 | 210,0 | 320,0 | 451,4 | 252,9 | 391,4 |
| 5,6 | 160,0 | 120,0 | 240,0 | | | | | | | | | | | | | | | | 197,1 | 94,3 | 117,1 | 240,0 | 120,0 | 160,0 | 268,6 | 137,1 | 188,6 | 340,0 | 180,0 | 260,0 | 411,4 | 222,9 | 331,4 |

## Technical Data

| Max Pressure | ** Min Pressure | Rotation | Stroke Adjustment | Screw Stroke Adjustment | *Moving time (sec.) | | Operating temperature (°C) |
|---|---|---|---|---|---|---|---|
| | | | | | Opening | Closing | |
| 8.4 bar | 2.4 bar | 92°<br>-1° +91° | 10 ° | For 1° drive<br>Need 1/2 turn screw | 1.5 | 1.7 | Standard –20°C +80°C<br>High temperature –20°C +150°C<br>Low temperature –50°C +60°C |

| Weight Kg | Chamber Ø (mm) | Air volume L/cycle | Maximum flange torque values |
|---|---|---|---|
| 11.8 | 100 | 1.32 | F10 = 500 Nm<br>F12 = 1000 Nm |

| | A1 | Weight Kg |
|---|---|---|
| Spring return Actuator with spring force 2.8 , is manufactured with only one spring cap and normal end cap (available only in standard version). | 454 | 10.2 |

*The moving time could vary on different operating and installation factors.
**Attention: for “High Temperature” and “Low Temperature” version, the Min Pressure is 3.5 bar.

**Operating Medium**
The operating medium shall have a dew point equal to– 20 °C or, to be at least, 10 °C below the ambient temperature (ISO 85731, Class 3).
The maximum particle size shall not exceed 40 µm (ISO 8573-1, Class 5).

**ACTUATECH S.p.A.**
Via San Lorenzo, 70 - 25069 Villa Carcina (BS) – ITALY Tel. (+39) 0308908142 Fax (+39) 0308908143
http://www.actuatech.com e-mail: actuatech@actuatech.com