ACTUATECH
ACTUATOR TECHNOLOGY

Actuator datasheet

GS60F05F07

Modification reserved. Rev.date 05.2021.
No guarantee for accuracy.
Older data sheets are invalid

COMPANY WITH MANAGEMENT SYSTEM CERTIFIED BY DNV GL
= ISO 9001 =
= ISO 14001 =

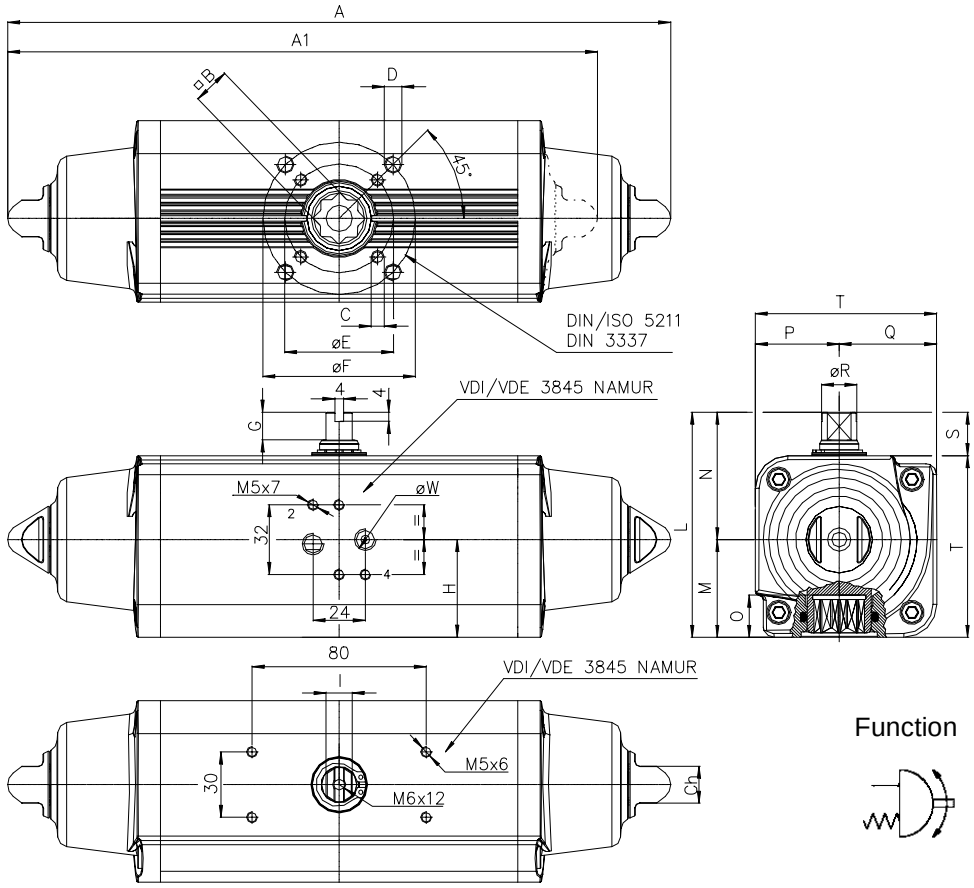

Function

Ref.	Dimensions (mm)
Flange	F05 - F07
C x depth	M6x9
D x depth	M8x12
E	50
F	70
B	17
O	19.3
A	338.5
G	13
H (bore)	44.8
I	12
L	107
M	46.8
N	60.2
P	40.2
Q	46.8
R	18
S	20
T	87
W	1/8" GAS
Ch	17
Ancillaries Attachment	AA1

Spring return Actuators Normally Closed (N.C.)- Output Torque related to rotation angle , in Nm
(0°valve closed 90° valve open)

Spring Torque				Air pressure supply in bar																												
				2,4			2,8			3			3,5			4,2			5			5,6			6			7			8		
SIZE	0°	50°	90°	0°	50°	90°	0°	50°	90°	0°	50°	90°	0°	50°	90°	0°	50°	90°	0°	50°	90°	0°	50°	90°	0°	50°	90°	0°	50°	90°	0°	50°	90°
2,8	20,0	15,0	30,0	22,9	10,7	12,9	**30,0**	**15,0**	**20,0**	33,6	17,1	23,6	42,5	22,5	32,5	55,0	30,0	45,0															
3,5	25,0	18,8	37,5							28,6	13,4	16,1	**37,5**	**18,8**	**25,0**	50,0	26,3	37,5	64,3	34,9	51,8	75,0	41,4	62,5									
4,2	30,0	22,5	45,0										32,5	15,0	17,5	**45,0**	**22,5**	**30,0**	59,3	31,1	44,3	70,0	37,5	55,0	77,1	41,8	62,1	95,0	52,5	80,0	112,9	63,2	97,9
5,6	40,0	30,0	60,0																49,3	23,6	29,3	**60,0**	**30,0**	**40,0**	67,1	34,3	47,1	85,0	45,0	65,0	102,9	55,7	82,9

Technical Data

Max Pressure	** Min Pressure	Rotation	Stroke Adjustment	Screw Stroke Adjustment	*Moving time (sec.)		Operating temperature (°C)
					Opening	Closing	
8.4 bar	2.4 bar	92° -1° +91°	10 °	For 1° drive Need 1/2 turn screw	0.48	0.56	Standard –20°C +80°C High temperature –20°C +150°C Low temperature –50°C +60°C

Weight Kg	Chamber Ø (mm)	Air volume L/cycle	Maximum flange torque values
3.35	63	0.33	F05 = 125 Nm F07 = 250 Nm

Spring return Actuator with spring force 2.8 , is manufactured with only one spring cap and normal end cap (available only in standard version).	A1	Weight Kg
	291.3	3.29

*The moving time could vary on different operating and installation factors.
**Attention: for “High Temperature” and “Low Temperature” version, the Min Pressure is 3.5 bar.

Operating Medium
The operating medium shall have a dew point equal to– 20 °C or, to be at least, 10 °C below the ambient temperature (ISO 85731, Class 3).
The maximum particle size shall not exceed 40 µm (ISO 8573-1, Class 5).

ACTUATECH S.p.A.
Via San Lorenzo, 70 - 25069 Villa Carcina (BS) – ITALY Tel. (+39) 0308908142 Fax (+39) 0308908143
http://www.actuatech.com e-mail: actuatech@actuatech.com