ACTUATECH
ACTUATOR TECHNOLOGY

Actuator datasheet

GS53F05F07

Modification reserved. Rev.date 05.2021.
No guarantee for accuracy.
Older data sheets are invalid

COMPANY WITH MANAGEMENT SYSTEM CERTIFIED BY DNV GL
= ISO 9001 =
= ISO 14001 =

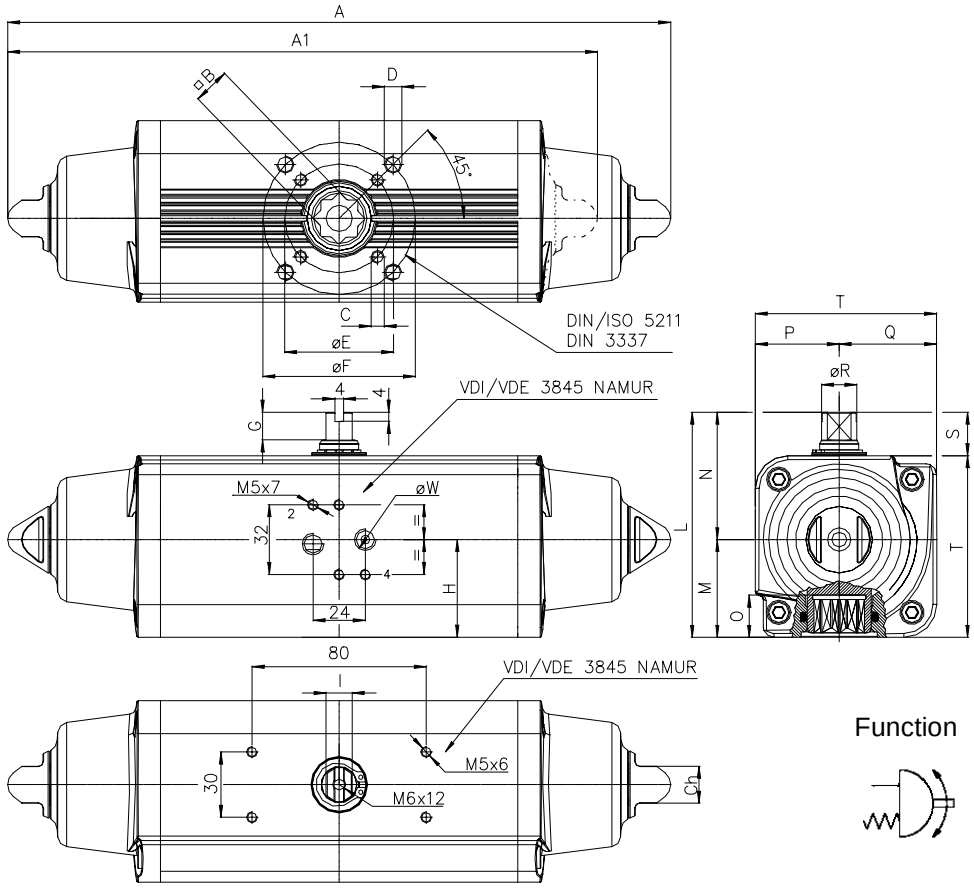

Function

Ref.	Dimensions (mm)
Flange	F05 - F07
C x depth	M6x9
D x depth	M8x12
E	50
F	70
B	17
O	19.3
A	304.3
G	13
H (bore)	44.8
I	12
L	103.3
M	44.8
N	58.5
P	38.5
Q	44.8
R	16.2
S	20
T	83.3
W	1/8" GAS
Ch	17
Ancillaries Attachment	AA1

Spring return Actuators Normally Closed (N.C.)- Output Torque related to rotation angle , in Nm
(0°valve closed 90° valve open)

Spring Torque				Air pressure supply in bar																												
				2,4			2,8			3			3,5			4,2			5			5,6			6			7			8		
SIZE	0°	50°	90°	0°	50°	90°	0°	50°	90°	0°	50°	90°	0°	50°	90°	0°	50°	90°	0°	50°	90°	0°	50°	90°	0°	50°	90°	0°	50°	90°	0°	50°	90°
2,8	17,5	13,0	26,5	20,2	9,3	11,2	26,5	13,0	17,5	29,6	14,9	20,6	37,5	19,5	28,5	48,5	26,0	39,5															
3,5	22,0	16,5	33,0							25,1	11,8	14,1	33,0	16,5	22,0	44,0	23,1	33,0	56,6	30,6	45,6	66,0	36,3	55,0									
4,2	26,0	19,5	40,0										29,0	13,0	15,0	40,0	19,5	26,0	52,6	26,9	38,6	62,0	32,5	48,0	68,3	36,2	54,3	84,0	45,5	70,0	99,7	54,8	85,7
5,6	35,0	26,0	53,0																43,6	20,4	25,6	53,0	26,0	35,0	59,3	29,7	41,3	75,0	39,0	57,0	90,7	48,3	72,7

Technical Data

Max Pressure	** Min Pressure	Rotation	Stroke Adjustment	Screw Stroke Adjustment	*Moving time (sec.)		Operating temperature (°C)
					Opening	Closing	
8.4 bar	2.4 bar	92° -1° +91°	10 °	For 1° drive Need 1/2 turn screw	0.41	0.48	Standard –20°C +80°C High temperature –20°C +150°C Low temperature –50°C +60°C

Weight Kg	Chamber Ø (mm)	Air volume L/cycle	Maximum flange torque values
3	60	0.29	F05 = 125 Nm F07 = 250 Nm

	A1	Weight Kg
Spring return Actuator with spring force 2.8 , is manufactured with only one spring cap and normal end cap (available only in standard version).	270.7	2.6

*The moving time could vary on different operating and installation factors.
**Attention: for “High Temperature” and “Low Temperature” version, the Min Pressure is 3.5 bar.

Operating Medium
The operating medium shall have a dew point equal to– 20 °C or, to be at least, 10 °C below the ambient temperature (ISO 85731, Class 3).
The maximum particle size shall not exceed 40 µm (ISO 8573-1, Class 5).

ACTUATECH S.p.A.
Via San Lorenzo, 70 - 25069 Villa Carcina (BS) – ITALY Tel. (+39) 0308908142 Fax (+39) 0308908143
http://www.actuatech.com e-mail: actuatech@actuatech.com