ACTUATECH
ACTUATOR TECHNOLOGY

Actuator datasheet

GS15F03F05

Modification reserved. Rev.date 05.2021.
No guarantee for accuracy.
Older data sheets are invalid

COMPANY WITH MANAGEMENT SYSTEM CERTIFIED BY DNV GL
= ISO 9001 =
= ISO 14001 =

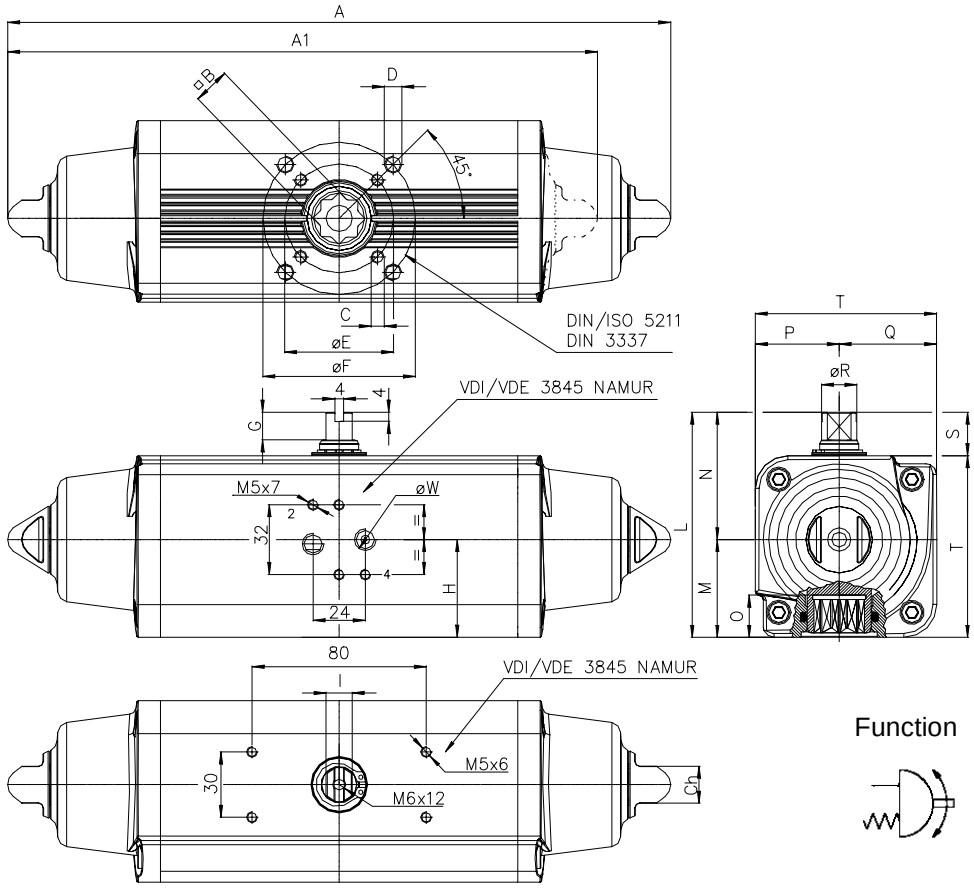

Function

Ref.	Dimensions (mm)
Flange	F03 - F05
C x depth	M5x8
D x depth	M6x9
E	36
F	50
B	11
O	13.2
A	233.3
G	10
H (bore)	32.3
I	9
L	79.2
M	31.5
N	47.7
P	27.7
Q	31.5
R	10.9
S	20
T	59.2
W	1/8" GAS
Ch	13
Ancillaries Attachment	AA1

Spring return Actuators Normally Closed (N.C.)- Output Torque related to rotation angle , in Nm
(0°valve closed 90° valve open)

Spring Torque				Air pressure supply in bar																												
SIZE	0°	50°	90°	2,4			2,8			3			3,5			4,2			5			5,6			6			7			8		
				0°	50°	90°	0°	50°	90°	0°	50°	90°	0°	50°	90°	0°	50°	90°	0°	50°	90°	0°	50°	90°	0°	50°	90°	0°	50°	90°	0°	50°	90°
2,8	5,0	3,7	7,5	5,7	2,6	3,2	7,5	3,7	5,0	8,4	4,2	5,9	10,6	5,6	8,1	13,8	7,4	11,3															
3,5	6,3	4,7	9,4							7,2	3,3	4,0	9,4	4,7	6,3	12,6	6,5	9,4	16,1	8,7	13,0	18,8	10,3	15,7									
4,2	7,5	5,6	11,3										8,2	3,7	4,4	11,3	5,6	7,5	14,9	7,7	11,1	17,6	9,3	13,8	19,4	10,4	15,6	23,8	13,1	20,0	28,3	15,7	24,5
5,6	10,0	7,5	15,0																12,3	5,9	7,3	15,0	7,5	10,0	16,8	8,6	11,8	21,3	11,3	16,3	25,7	13,9	20,7

Technical Data

Max Pressure	** Min Pressure	Rotation	Stroke Adjustment	Screw Stroke Adjustment	*Moving time (sec.)		Operating temperature (°C)
					Opening	Closing	
8.4 bar	2.4 bar	92° -1° +91°	10 °	For 1° drive Need 1/3 turn screw	0.11	0.13	Standard –20°C +80°C High temperature –20°C +150°C Low temperature –50°C +60°C

Weight Kg	Chamber Ø (mm)	Air volume L/cycle	Maximum flange torque values
1.2	40	0.09	F03 = 32 Nm F05 = 125 Nm

	A1	Weight Kg
Spring return Actuator with spring force 2.8 , is manufactured with only one spring cap and normal end cap (available only in standard version).	203.8	1

*The moving time could vary on different operating and installation factors.
**Attention: for “High Temperature” and “Low Temperature” version, the Min Pressure is 3.5 bar.

Operating Medium
The operating medium shall have a dew point equal to– 20 °C or, to be at least, 10 °C below the ambient temperature (ISO 85731, Class 3).

ACTUATECH S.p.A.
Via San Lorenzo, 70 - 25069 Villa Carcina (BS) – ITALY Tel. (+39) 0308908142 Fax (+39) 0308908143
http://www.actuatech.com e-mail: actuatech@actuatech.com