ACTUATECH
ACTUATOR TECHNOLOGY

Actuator datasheet

GS360F10F12 INOX

Modification reserved. Rev.date 05.2021.
No guarantee for accuracy.
Older data sheets are invalid

COMPANY WITH MANAGEMENT SYSTEM CERTIFIED BY DNV GL
= ISO 9001 =
= ISO 14001 =

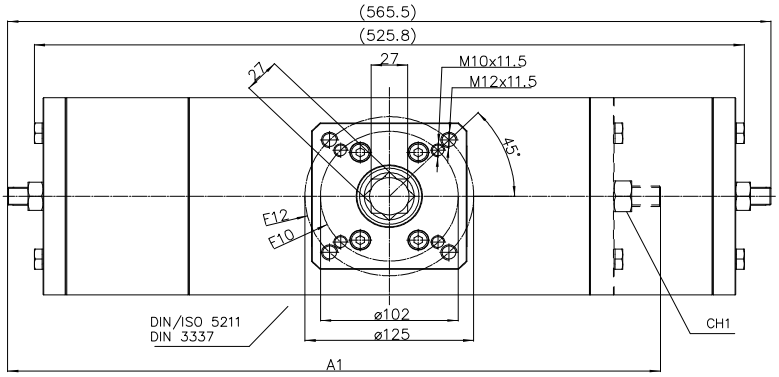

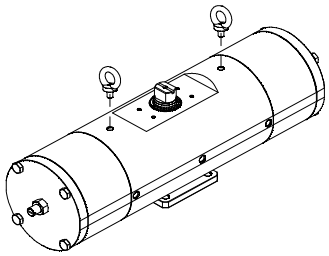

For the lifting use n° 2 eyebolts M10
Lifting points are designed for actuator only

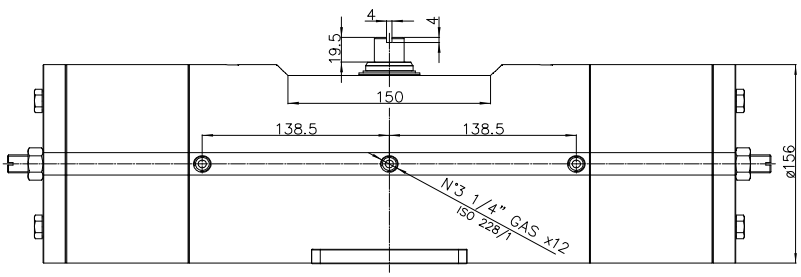

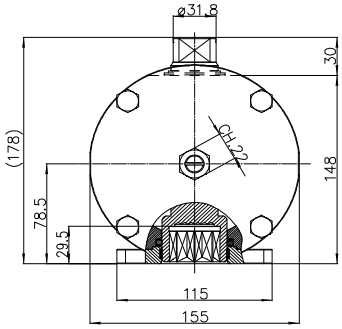

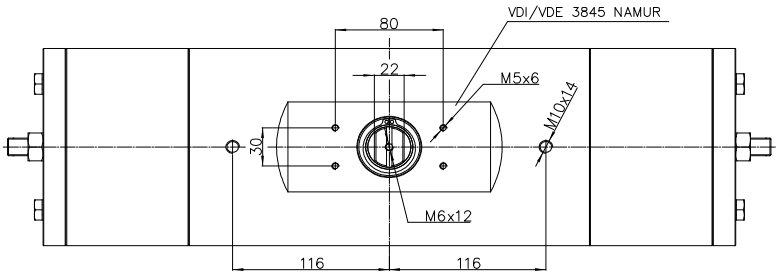

Function

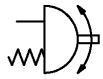

Spring return Actuators Normally Closed (N.C.) - Output Torque related to rotation angle , in Nm
(0°valve closed 90° valve open)

Spring Torque				Air pressure supply in bar																																
				2,4			2,8			3			3,5			4,2			5			5,6			6			7			8		
SIZE	0°	50°	90°	0°	50°	90°	0°	50°	90°	0°	50°	90°	0°	50°	90°	0°	50°	90°	0°	50°	90°	0°	50°	90°	0°	50°	90°	0°	50°	90°	0°	50°	90°
2,8	120.0	90.0	180.0	137.1	64.3	77.1	180.0	90.0	120.0	201.4	102.9	141.4	255.0	135.0	195.0	330.0	180.0	270.0															
3,5	150.0	112.5	225.0							171.4	80.4	96.4	225.0	112.5	150.0	300.0	157.5	225.0	385.7	208.9	310.7	450.0	247.5	375.0									
4,2	180.0	135.0	270.0										195.0	90.0	105.0	270.0	135.0	180.0	355.7	186.4	265.7	420.0	225.0	330.0	462.9	250.7	372.9	570.0	315.0	480.0	677.1	379.3	587.1
5,6	240.0	180.0	360.0																295.7	141.4	175.7	360.0	180.0	240.0	402.9	205.7	282.9	510.0	270.0	390.0	617.1	334.3	497.1

Technical Data

Max Pressure	** Min Pressure	Rotation	Stroke Adjustment	Screw Stroke Adjustment	*Moving time (sec.)		Operating temperature (°C)
					Opening	Closing	
8.4 bar	2.4 bar	92° -1° +91°	10°	For 1° drive Need 1/2 turn screw	1.7	1.9	Standard –20°C +80°C High temperature –20°C +150°C Low temperature –50°C +60°C

Weight Kg	Chamber Ø (mm)	Air volume L/cycle	Maximum flange torque values
45.5	115	2	F10 = 500 Nm F12 = 1000 Nm

	A1	CH1	Weight Kg
Spring return Actuator with spring force 2.8 , is manufactured with only one spring cap and normal end cap (available only in standard version).	483.5	24	37.5

*The moving time could vary on different operating and installation factors.
****Attention: for "High Temperature" and "Low Temperature" version, the Min Pressure is 3.5 bar.**

Operating Medium
The operating medium shall have a dew point equal to – 20 °C or, to be at least, 10 °C below the ambient temperature (ISO 8573-1, Class 3).
The maximum particle size shall not exceed 40 µm (ISO 8573-1, Class 5).

ACTUATECH S.p.A.
Via S. Lorenzo, 70, 25069 Villa Carcina BS – ITALY Tel. (+39) 0308908142 Fax (+39) 0308908143
http://www.actuatech.com e-mail: actuatech@actuatech.com