ACTUATECH
ACTUATOR TECHNOLOGY

Actuator datasheet

GD960F14 INOX

Modification reserved. Rev.date 05.2021.
No guarantee for accuracy.
Older data sheets are invalid

COMPANY WITH MANAGEMENT SYSTEM CERTIFIED BY DNV GL
= ISO 9001 =
= ISO 14001 =

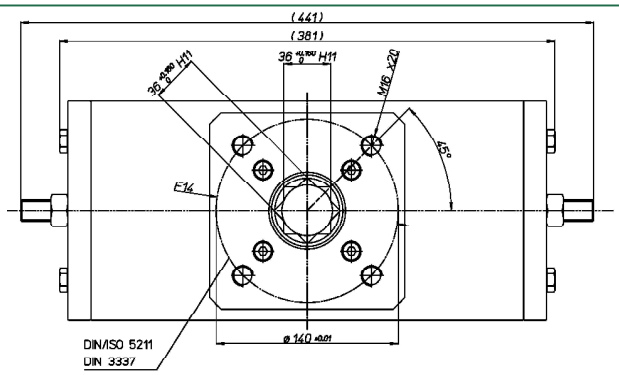

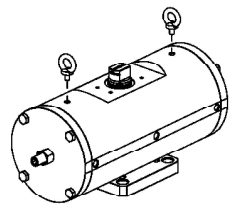

For the lifting use n° 2 eyebolts M10
Lifting points are designed for actuator only

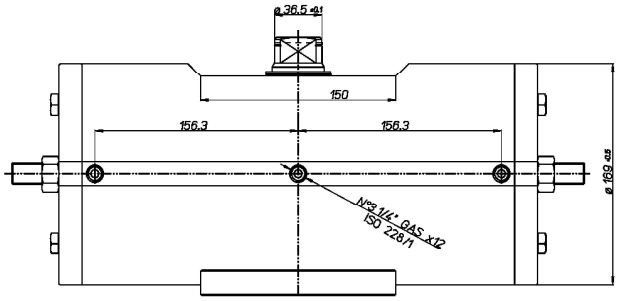

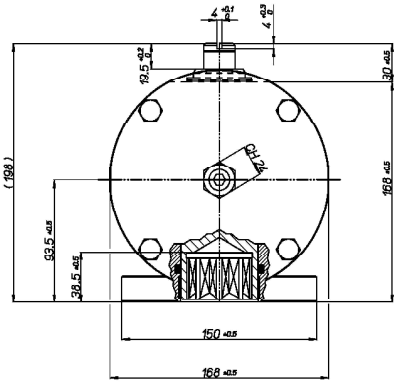

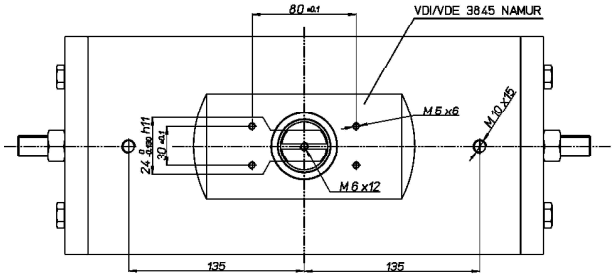

Function

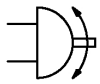

Double Acting Actuators - Output Torque related to rotation angle , in Nm (0°valve closed 90°valve open)								
ROTATION ANGLE	Air pressure supply in bar							
	2,5	3	4	5	5,6	6	7	8
0°	428.6	514.3	685.7	857.1	960	1028.6	1200	1371.4
50°	214.3	257.1	342.9	428.6	480	514.3	600	685.7
90°	321.4	385.7	514.3	642.9	720	771.4	900	1028.6

Technical Data

Max Pressure	** Min Pressure	Rotation	Stroke Adjustment	Screw Stroke Adjustment	*Moving time (sec.)		Operating temperature (°C)
					Opening	Closing	
8.4 bar	1 bar	92° -1° +91°	10°	For 1° drive Need 3/4 turn screw	1.5	1.6	Standard –20°C +80°C High temperature –20°C +150°C Low temperature –50°C +60°C

Weight Kg	Chamber Ø (mm)	Air volume L/cycle	Maximum flange torque values
40	125	4.8	F14 = 2000 Nm

*The moving time could vary on different operating and installation factors.
****Attention: for "High Temperature" and "Low Temperature" version, the Min Pressure is 3 bar.**

Operating Medium
The operating medium shall have a dew point equal to – 20 °C or, to be at least, 10 °C below the ambient temperature (ISO 8573-1, Class 3).
The maximum particle size shall not exceed 40 µm (ISO 8573-1, Class 5).

ACTUATECH S.p.A.
Via S. Lorenzo, 70, 25069 Villa Carcina BS – ITALY Tel. (+39) 0308908142 Fax (+39) 0308908143
http://www.actuatech.com e-mail: actuatech@actuatech.com